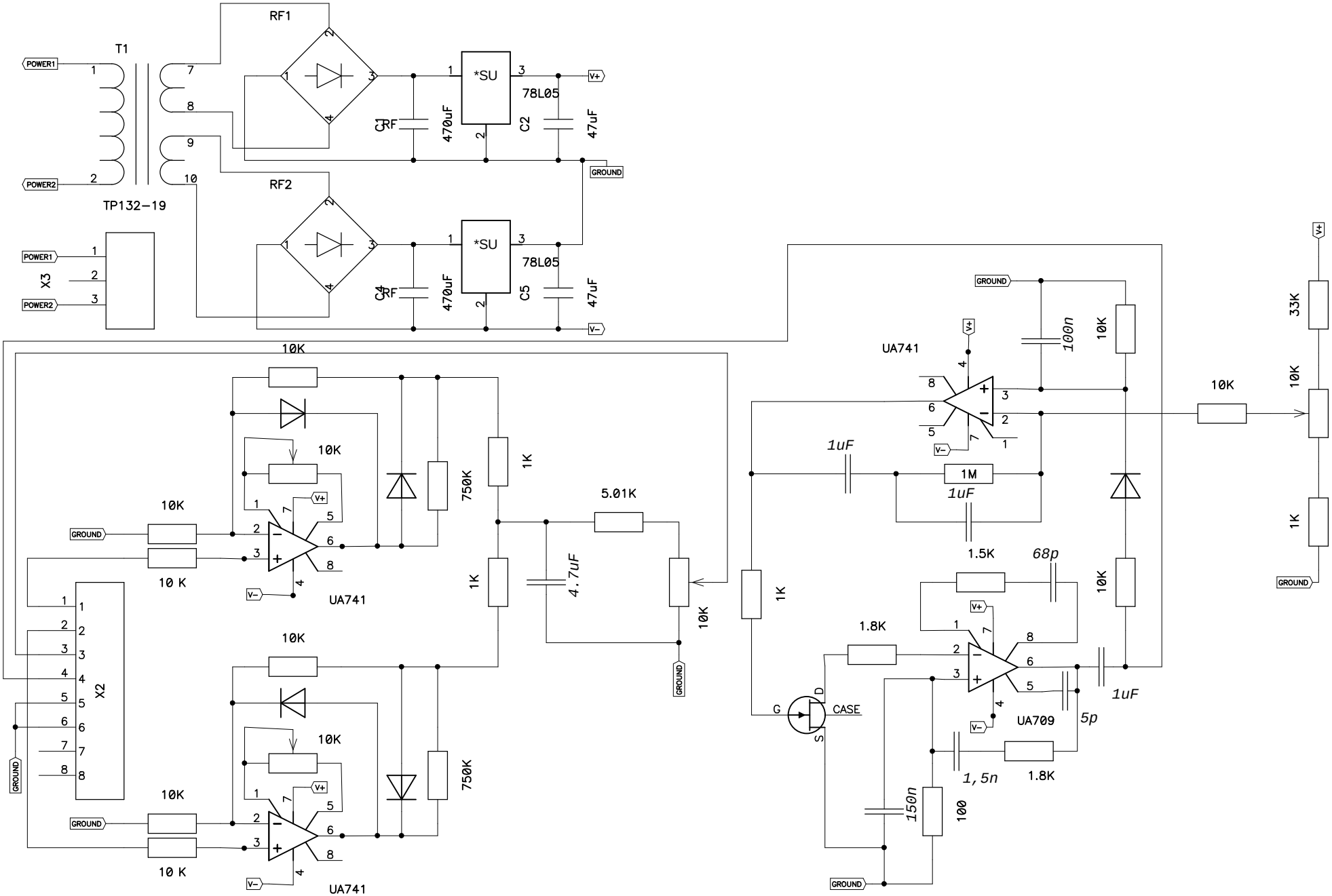
T1
TP132-19
POWER1
POWER2
X3
RF1
RF2
C1
C4
470uF
*SU
78L05
C2
C5
47uF
V+
V-
GROUND
10K
10 K
UA741
750K
1K
5.01K
4.7uF
X2
1uF
1M
1.5K
68p
1.8K
UA709
5p
1,5n
150n
100
CASE
G
D
S
100n
33K